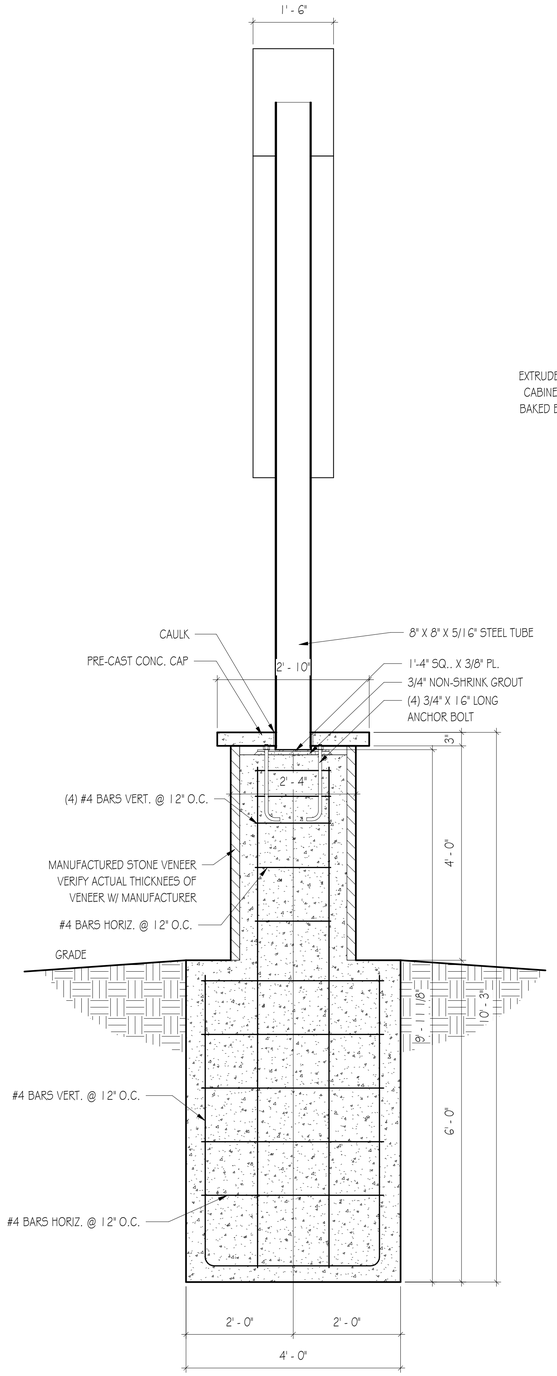

3 SIGN SECTION
SCALE: 3/4" = 1'-0"

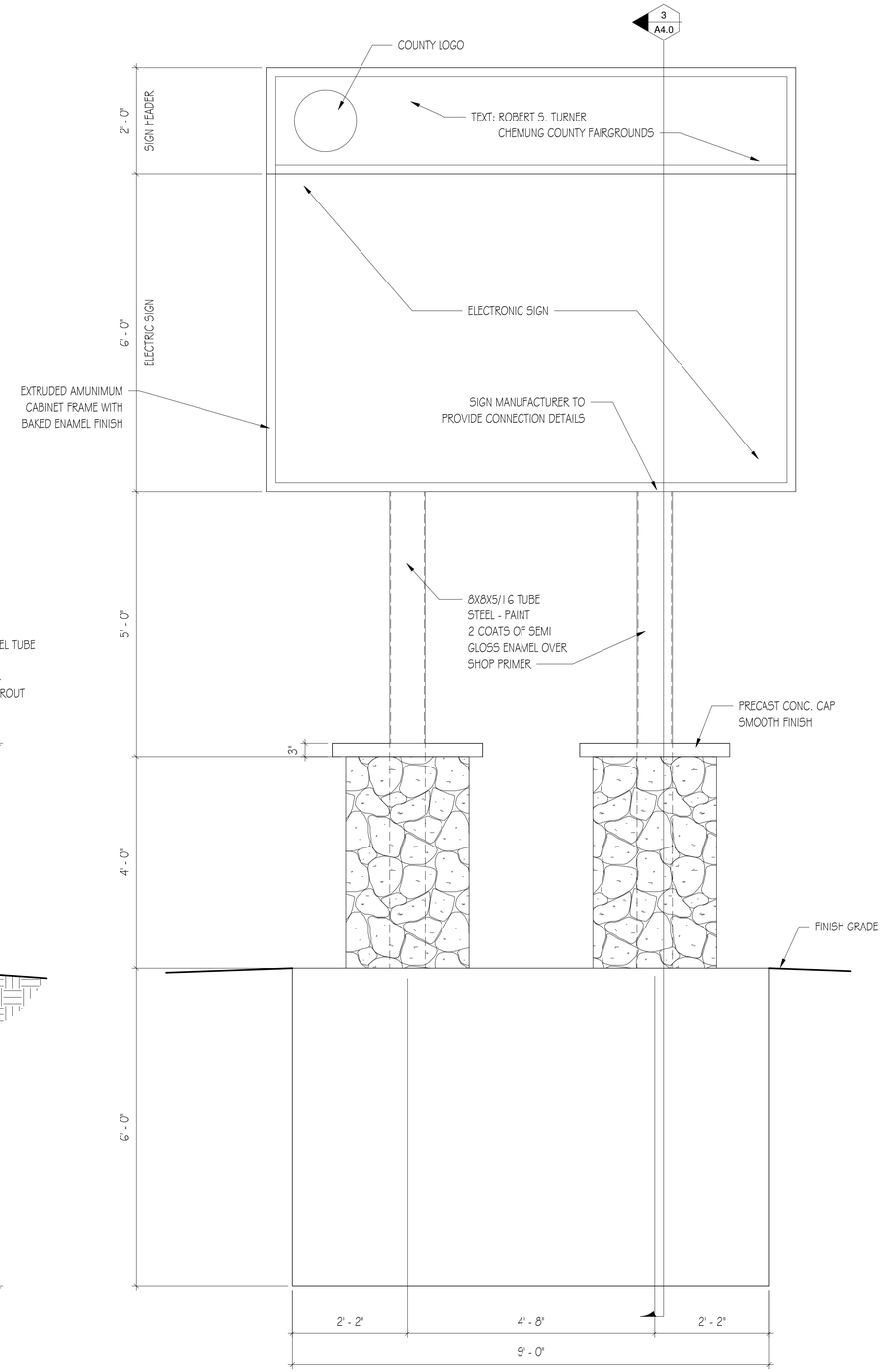

2 SIGN ELEVATION
SCALE: 3/4" = 1'-0"

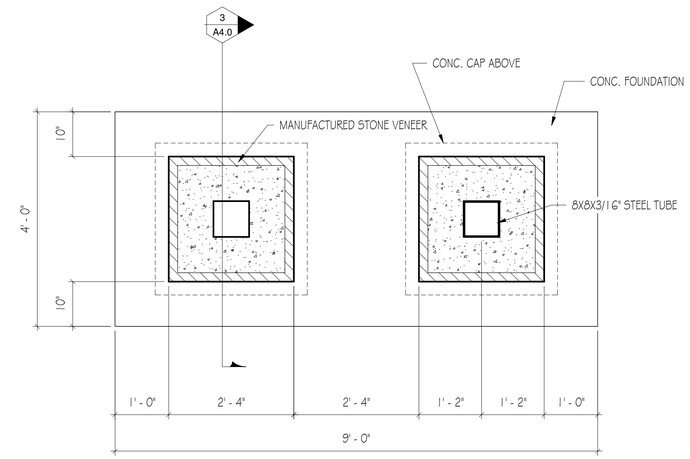

1 ELECTRONIC SIGN PLAN
SCALE: 3/4" = 1'-0"

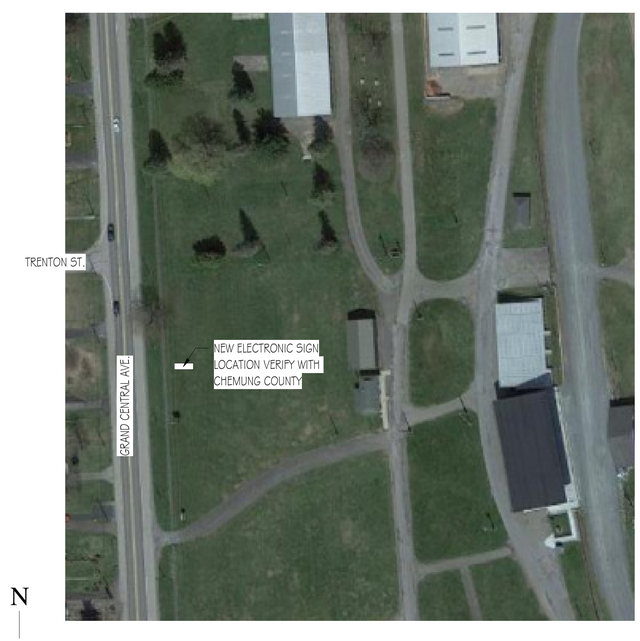

N

SITE LOCATION PLAN CC FAIRGROUNDS
SCALE: 1" = 100'-0"

3/6/2024 10:55:06 AM

Foor & Associates Architects
Since 1893

111 North Main Street
Elmira, New York 14901
Phone: 607.733.4613
Fax: 607.734.0120

5 East Wellsboro Street
Mansfield, Pennsylvania 16933
Phone: 570.662.3667
Fax: 570.662.3671

REGISTERED ARCHITECT LARRY R. FOOR 018715 STATE OF NEW YORK

PROJECT & CLIENT

ELECTRONIC SIGN AT CHEMUNG COUNTY FAIRGROUNDS FOR

CHEMUNG COUNTY

170 FAIRVIEW RD.
HORSEHEADS, NY

REVISIONS

DRAWING TITLE

PLAN AND SECTION (CHEMUNG COUNTY FAIRGROUNDS)

RFB 2622

DATE	DRAWN BY
MARCH, 2024	DWY

JOB NO.	DWG. NO.
4037	A4.0